GP5168 **(5) GO COOPERATIVE DUO TRIKE**

BIKES & TRIKES

Use extra label provided to mark parking bay.

GO BALANCE RANGE

(1) Go Balance Trike

(2) Go Balance Bike

(3) Go Balance Tandem

(4) Go Balance Scooter

GO COOPERATIVE RANGE

(5) Go Cooperative Duo Trike

(6) Go Cooperative Trio Trike

(7) Go Cooperative Taxi

(8) Go Cooperative Chariot

⚠ WARNING

Please read this manual fully before attempting to assemble or ride this bike / trike.
This toy should be used with caution since skill is required to avoid falls or collisions causing injury to the user or third parties.
Protective equipment should be worn.
Parent or adult supervision is recommended at all times.
This bike / trike is designed to teach young children balance and coordination, it should not be used on public roads.
This bike / trike is designed for children aged 36 months +.
Please ensure all fittings are tight and everything is correctly assembled before use.
Tighten the nuts and bolts on a regular basis to ensure safety.

CE

UK CA

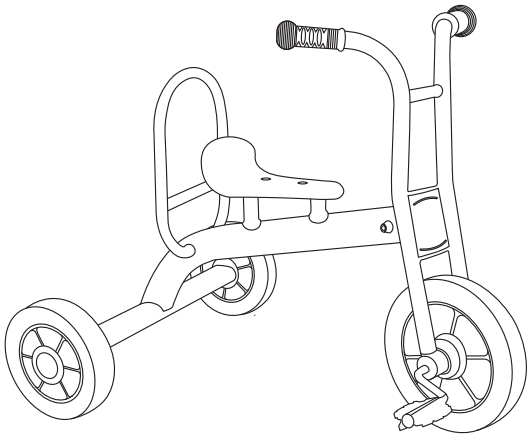

BIKES & TRIKES

(5) GO COOPERATIVE DUO TRIKE

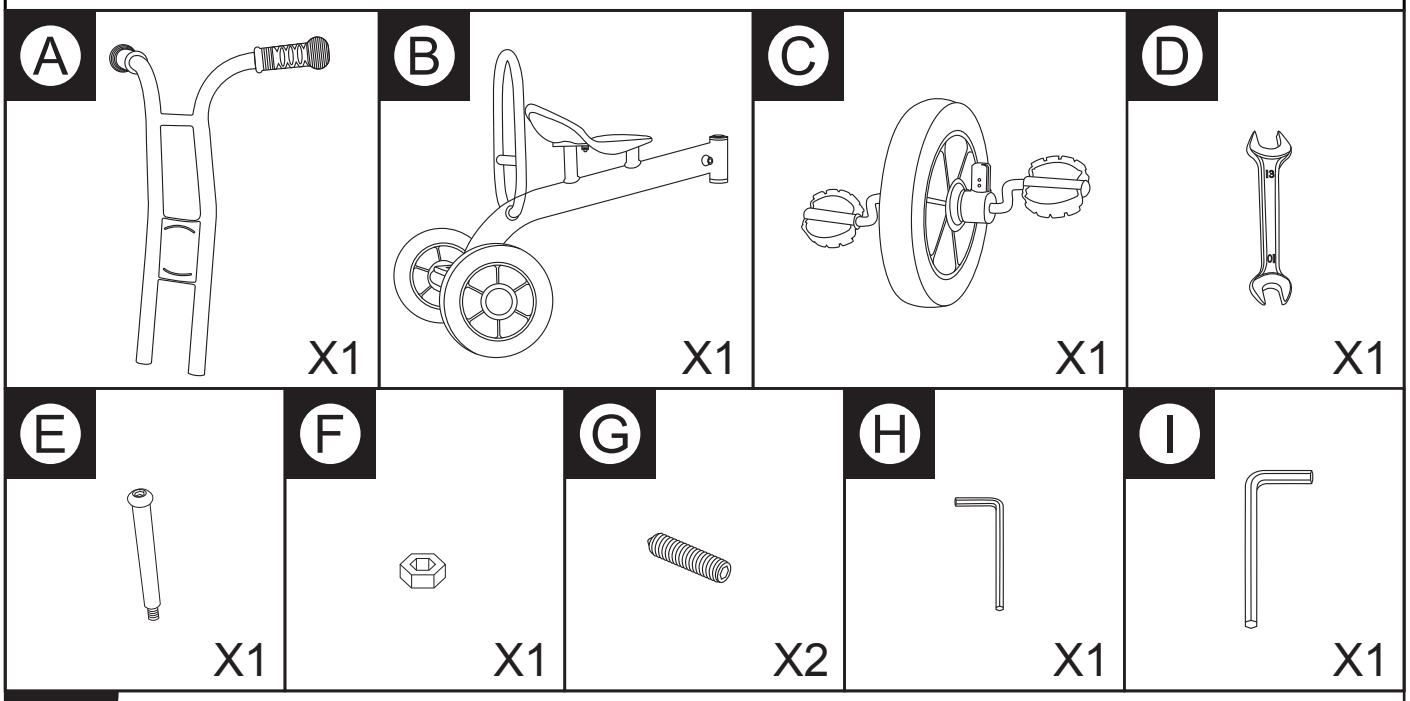

1

- Join **A** and **C** together using **G**.
- Then connect to **B** using **E** and **F**.

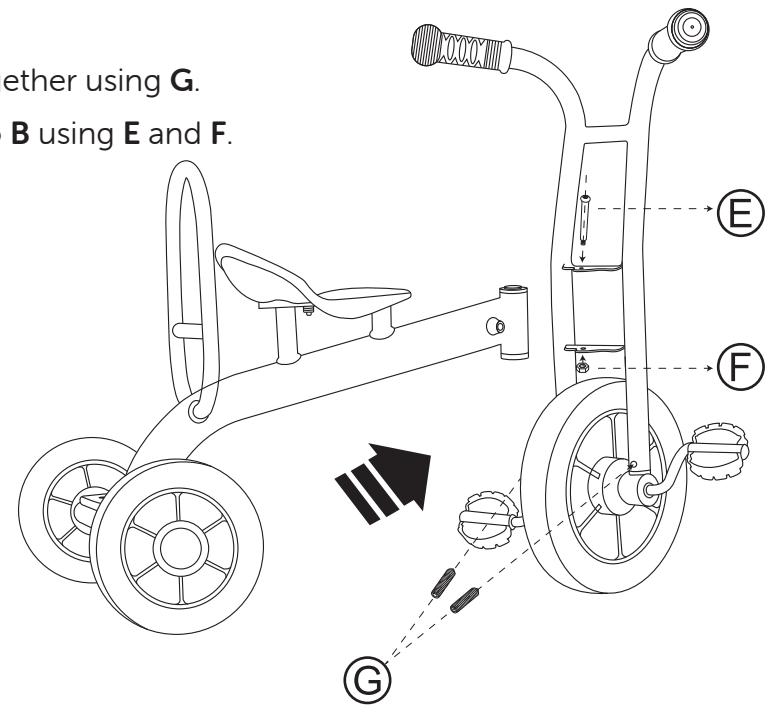

⚠ **WARNING: ADULT ASSEMBLY REQUIRED**